**RoHS Compliant**

| REVISIONS | | | |
|---|---|---|---|
| REV. | DESCRIPTION | DATE | DESIGN |
| | | | |

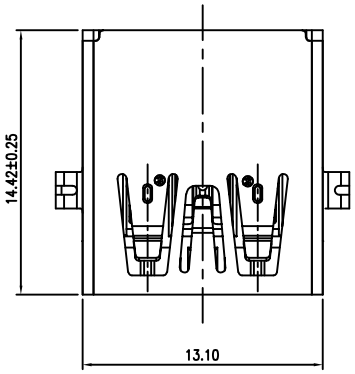


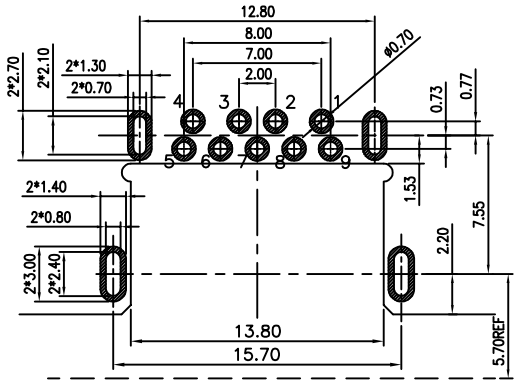


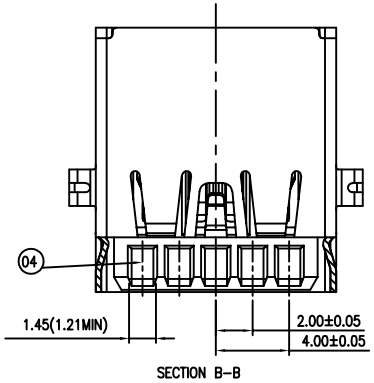


TOLERANCE: ±0.05, THICKNESS: 1.2mm
RECOMMENDED PCB LAYOUT
(TOP VIEW)

NOTE:
1.MATERIAL:
- 1.1 INSULATOR:PA 9T, UL 94 V-0;COLOR BLACK
- 1.2 4PIN CONTACT:C5191(T=0.25mm)
- 1.3 5PIN CONTACT:C2680(T=0.20mm)
- 1.4 SHELL:SUS201(T=0.30mm)

2.ELECTRICAL CHARACTERISTICS;
- 2.1 Current Rating:1.8
- 2.2 Insulation Resistance:100MΩ Min
- 2.3 Contact Resistance:30mΩ Max
- 2.4 Dielectric Withstanding Voltage:500V AC
- 2.5 OPERATING TEMPEROTURE:-40°C ~ 85°C

3. MECHANICAL CHARACTERISTICS:
- 3.1 MATING FORCE:35 N Max
- 3.2 UNMATED FORCE:10 N Min INITIAL; 8 N Min AFTER TEST
- 3.3 DURABILITY:5,000 CYCLES

4.PLATING SPECIFICATION:
- 4.1 CONTACTS:Ni 50u" MIN. UNDER PLATED,GOLD FLASH PLATED ON THE MATING AREA OF CONTACT.
  MATTE Sn 80u" MIN. PLATED ON THE SOLDER TALL.
- 4.2 FRONT SHELL:Ni 50u"MIN.
- 4.3 Salt Spray 24H

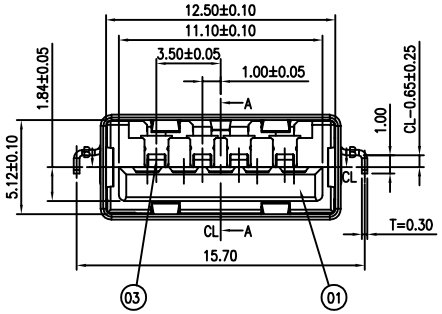


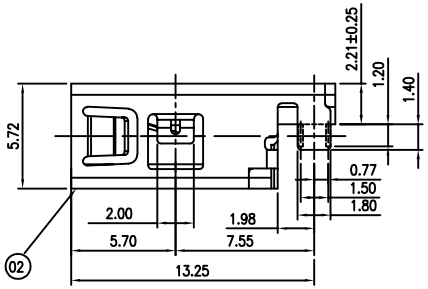


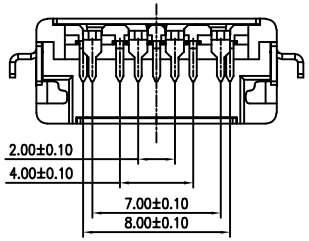


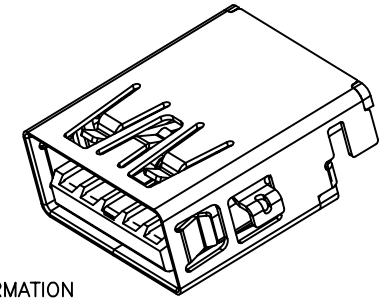

| Pin # | SIGNAL NAME |
|---|---|
| 1 | VBUS |
| 2 | D- |
| 3 | D+ |
| 4 | GND |
| 5 | StdA_SSRX- |
| 6 | StdA_SSRX+ |
| 7 | GND_DRAIN |
| 8 | StdA_SSTX- |
| 9 | StdA_SSTX+ |
| Shell | Shield |

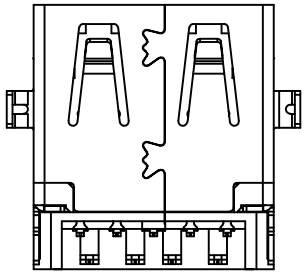

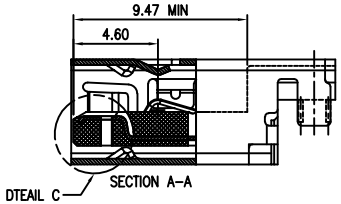


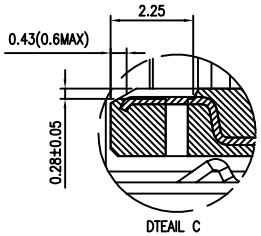


PART NO. INFORMATION

**U03-A F X A X X -5016**

- PORT TYPE: A: TYPE A
- GENDER: F: FEMALE, M: MALE
- CONTACT PLATED: 1: GOLD FLASH, 2: GOLD 3U", 3: GOLD 5U", 4: GOLD 10U", 5: GOLD 15U", 6: GOLD 30U"
- HOUSING MATERIAL: A: LCP B: PBT C: PA9T D: PA6T E: PA46 F: PA66
- HOUSING COLOR: 2: WHITE, 5: BLACK, 9: BLUE
- PACKAGE: T: TRAY R:TAPE REEL

**Bestcreate Technology Limited**

| TOLERANCES UNLESS OTHERWISE SPECIFIED: | | | |
|---|---|---|---|
| X. | ± 0.30 | X.° | ± 3° |
| .X | ± 0.20 | .X° | ± 2° |
| .XX | ± 0.15 | .XX° | ± 1° |

Website: www.bsc-elec.com
E-mail: bestcreate@bsc-elec.com

| DESIGN: I.L | DATE: 2017.3.1 |
|---|---|
| CHECKED: C.W | DATE: 2017.3.1 |
| APPROVED: C.W | DATE: 2017.3.1 |

TITLE: USB 3.1 Gen2(10Gbps)TYPE A 9P H=5.72MM CH=-0.65MM REC,RVS,DIP TYPE

| MATERILA: | PART NO: U03-AFXAXX-5016 | SIZE: A4 |
|---|---|---|
| FINSH: | DWG NO: U03-AFXAXX-5016 | SHEET: 1 OF 2 |

| REV: A | UNIT mm | SCALE 1=1 | QUALITY SYMBOLS |
|---|---|---|---|