RoHS Compliant

30 Min/1.5m
IP-X8

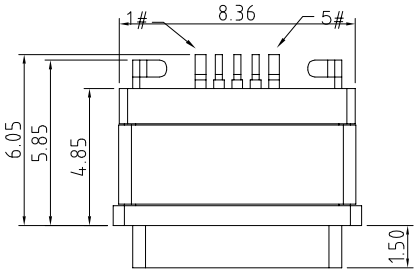

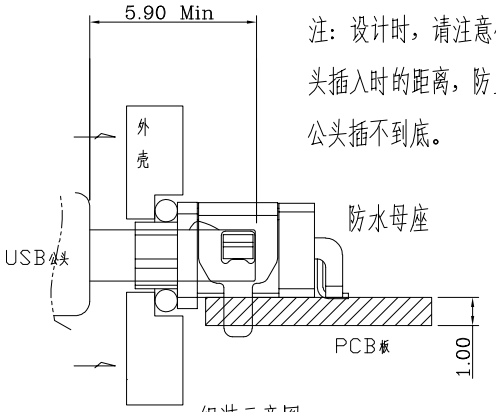

注：设计时，请注意公头插入时的距离，防止公头插不到底。

组装示意图

REVISIONS			
REV.	DESCRIPTION	DATE	DESIGN

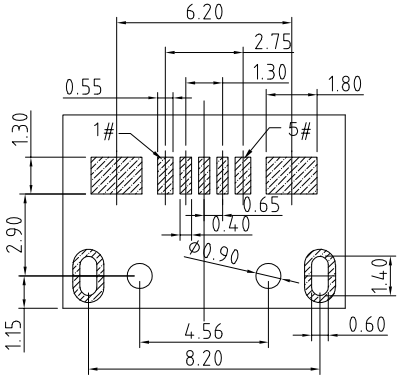

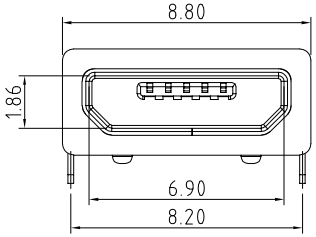

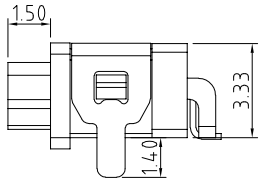

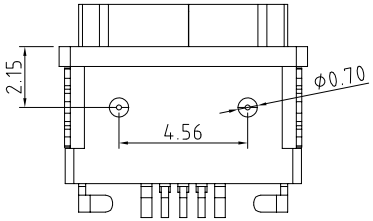

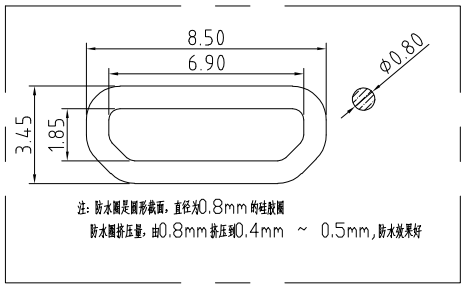

RECOMMENDED PCB LAYOUT(TOP VIEW)

THICKNESS T=1.0mm
DEFAULT TOLERANCE+/−0.05

SPECIFICATIONS:
1. ELECTRICAL CHARACTERISTICS:
   1.1. RATING: 3A(PIN1&5),0.5A(PIN2&3&4);
   1.2. CONTACT RESISTANCE: 30 mΩ MAX.(INITIAL);
   1.3. DIELECTRIC WITHSTANDING: 500V AC MIN.;
   1.4. INSULATION RESISTANCE: 1000MΩ MIN.;
2. DURABILITY: 5,000 CYCLES MIN.;
3. INSERTION FORCE: 3.5Kgf (35N) Max.;
4. EXTRACTION FORCE: 0.8Kgf (8N) Min;
5. WATER PROOFNESS:THIS PRODUCT IS BASED ON IPX8
6. PLUG INTERFACE DIMENSIONS COMFORM TO USB2.0 SPEC.
7. PACKAGING: TAPE & REEL.

PART NO. INFORMATION

U01-B F X X 5 R - W033

- PORT TYPE: B: TYPE B
- GENDER: F: FEMALE, M: MALE
- CONTACT PLATED: 1: GOLD FLASH; 2: GOLD 3U"; 3: GOLD 5U"; 4: GOLD 10U"; 5: GOLD 15U"; 6: GOLD 30U"
- HOUSING MATERIAL: A: LCP B: PBT C: PA9T D: PA6T E: PA46 F: PA66
- HOUSING COLOR: 2: WHITE; 5: BLACK; 9: NATURE
- PACKAGE: R: TAPE REEL

Contact Number	Signal Name	Remarks
1#	VBUS	Power
2#	D−	Date−
3#	D+	Date+
4#	ID	Reserve or Gound
5#	GND	Gound

ITEM	PARTNAME	Q'TY	FINISH
3	Shell	1	SUS304R-1/2H Ni PlatingT=0.25mm
2	Contact	5	Phosphor bronze C5191R-EH Au/Ni Plating T=0.20mm
1	Housing	1	PA10T (G.F30%)

Bestcreate Technology Limited

TOLERANCES UNLESS OTHERWISE SPECIFIED:			
X.	± 0.20	X.°	± 2°
.X	± 0.15	.X°	± 1°
.XX	± 0.10	.XX°	± 0.5°

Website: www.bsc-elec.com
E-mail: bestcreate@bsc-elec.com

DESIGN:	DATE:
I.L	2017/3/1
CHECKED: C.W	DATE: 2017/3/1
APPROVED: C.W	DATE: 2017/3/1

TITLE: IPX8 WATERPROOF MICRO USB 2.0 5P B FEMALE CONNECTOR SMT TYPE

MATERILA:	PART NO: U01-BFXX5R-W033	SIZE: A4
FINSH:	DWG NO: U01-BFXX5R-W033	SHEET: 1 OF 1

REV:	UNIT	SCALE	QUALITY SYMBOLS
A	mm	1=1	