RoHS Compliant

REVISIONS			
REV.	DESCRIPTION	DATE	DESIGN

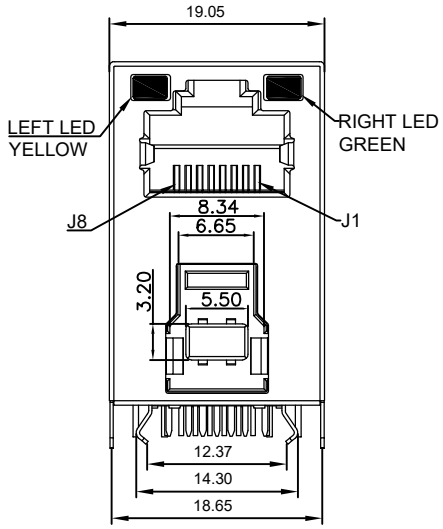

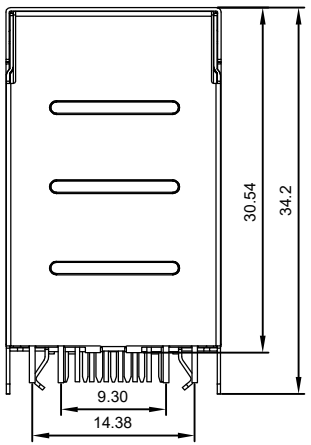

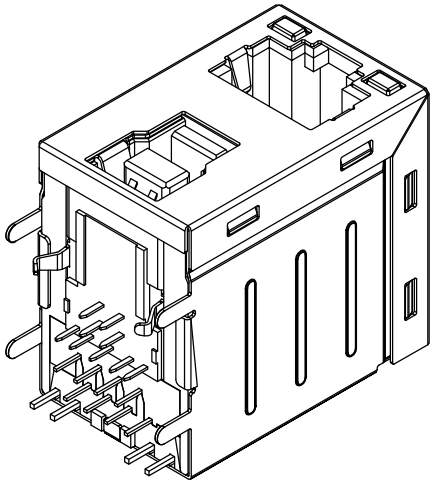

NOTE:

1.MATERIAL:
Housing: High temp. Thermo plastics,PBT ,BK,UL94V-0
Contact:Copper Alloy
Shell: SPCC,Nickel plating overall.

2.Electrical performance:
Voltage Current Rating:1.5 AMP. 30V AC
Insulation Resistance:1000M Ω Min.
Contact Resistance:30 m Ω Max.
Dielectric Withstanding Voltage:500V AC

3.Temperature Range:-45 ℃ to +85℃

4.FINISH:
Contact:Tin Plating 100u" on solder tail area,
RJ45 Gold plating 1u" on contact area.
USB Gold plating 1u" on contact area,
30u" min Ni underplating over all.

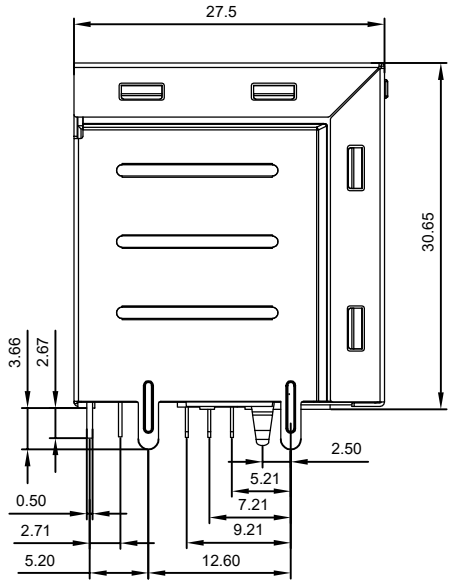

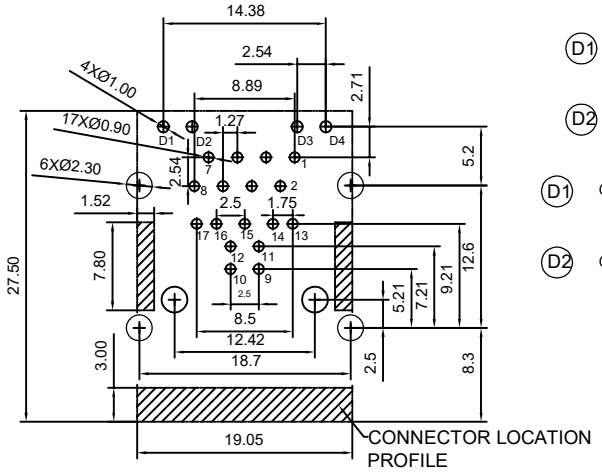

RECOMMENDED P.C.B. PATTERN LAYOUT

COMPONENT SIDE SHOWN

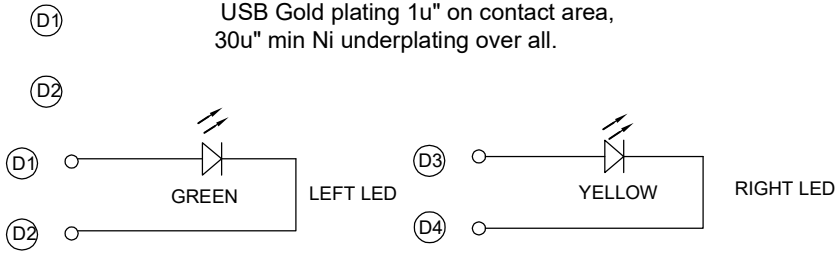

PART NO. INFORMATION

RJU3B01- X 5 0 X - 007

CONTACT PLATED
1: G/F 2: AU 3U"
3: AU 6U" 4: AU 15U"
5: AU 30U"

PACKAGE
R: TAPE REEL
T: TRAY

Bestcreate Technology Limited

TOLERANCES UNLESS OTHERWISE SPECIFIED:					
.X	±	0.35	X.°	±	3°
.XX	±	0.25	.X°	±	2°
.XXX	±	0.15	.XX°	±	1°

Website:www.bsc-elec.com
Email:bestcreate@bsc-elec.com

DATE: I.L 2017.3.1	TITLE: RJ45 WITH USB B TYPE FEMALE 3.0,WITH LEDs	
CHECKED: C.W DATE: 2017.3.1	MATERILA:	PART NO: RJU3B01-X50X-007 SIZE: A4
APPROVED: C.W DATE: 2017.3.1	FINSH:	DWG NO: RJU3B01-X50X-007

REV:	UNIT	SCALE	QUALITY SYMBOLS
A	mm	1=1	