RoHS Compliant

REVISIONS			
REV.	DESCRIPTION	DATE	DESIGN

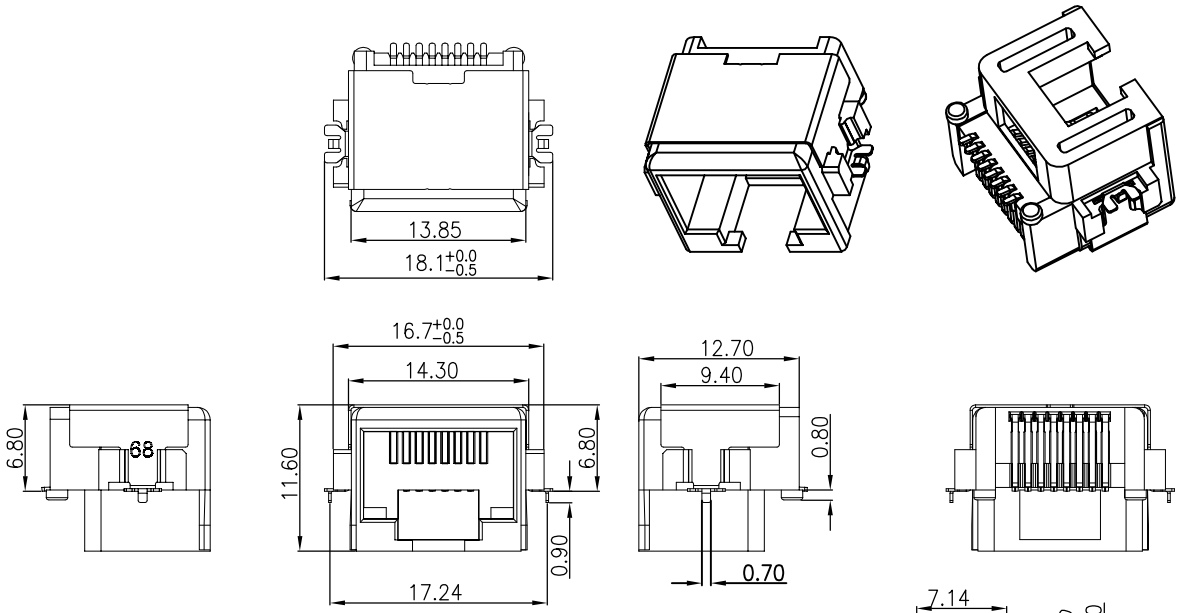

NOTES

MATERIAL
1. HOUSING MATERIAL : GLASS FILLED POLYESTER UL94V-0.
2. CONTACT MATERIAL : PHOSPHOR BRONZE T=0.3mm.
3. PLATING : GOLD FLASH PLATING OVER NICKEL.
4. SHIELD : 0.20mm THICKNESS COPPER ALLOY WITH NICKEL PLATED.

ELECTRICAL
1. VOLTAGE RATING : 125 VAC RMS.
2. CURRENT RATING : 1.5 AMP.
3. CONTACT RESISTANCE : 40 MILLIOHMS MAX.
4. INSULATION RESISTANCE : 500 MEGOHMS MIN @ 100V DC .
5. DIELECTRIC DIELECTRIC RESISTANCE : 500V DC RMS 50Hz. 1MIN.

MECHANICAL
1. DURRABILITY : 750 CYCLES MIN.
2. MATING/UNMATING FORCE : 2.24 KG.F MAX.

ENVIRONMENTAL:
1. STORAGE : -40℃～+85℃.
2. OPERATION : -40℃～+85℃

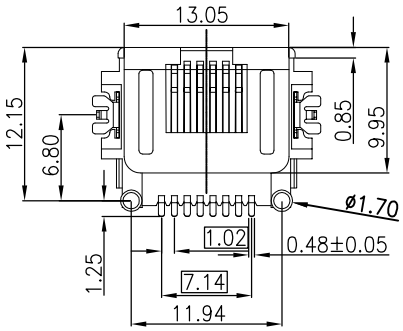

8	—
7	—
6	RX-
5	—
4	—
3	RX+
2	TX-
1	TX+
PIN序	说明

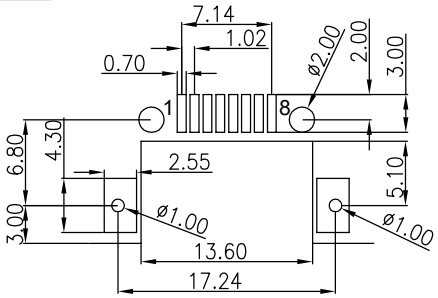

PCBLAYOUT TOP VIEW

TOL ±0.05

PART NO. INFORMATION

RJ01- X 5 0 X - 014 - V1

CONTACT PLATED
1: G/F 2: AU 3U"
3: AU 6U" 4: AU 15U"
5: AU 30U"

PACKAGE
R: TAPE REEL
T: TRAY

Bestcreate Technology Limited

TOLERANCES UNLESS OTHERWISE SPECIFIED:					
.X	±	0.30	X.°	±	3°
.XX	±	0.20	.X°	±	2°
.XXX	±	0.10	.XX°	±	1°

Website:www.bsc-elec.com
Email:bestcreate@bsc-elec.com

DESIGN:	DATE:
I.L	2017.3.1
CHECKED:	DATE:
C.W	2017.3.1
APPROVED:	DATE:
C.W	2017.3.1

TITLE: MID-MOUNT 6.8MM RJ45 8P8C CONNECTOR SMT TYPE

MATERILA:	PART NO: RJ01-X50X-014-V1	SIZE: A4
FINSH:	DWG NO: RJ01-X50X-014-V1	

REV:	UNIT	SCALE	QUALITY SYMBOLS
A	mm	1=1	