RoHS Compliant

REVISIONS			
REV.	DESCRIPTION	DATE	DESIGN

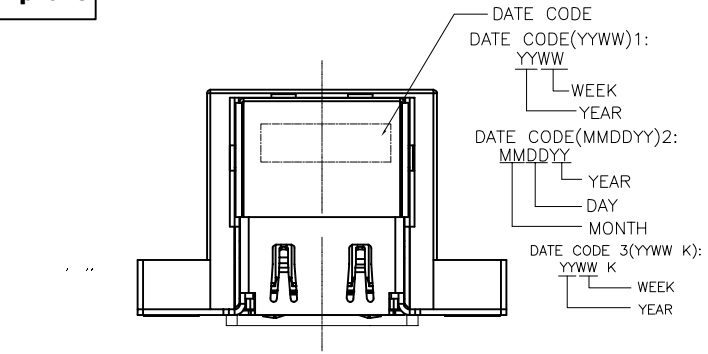

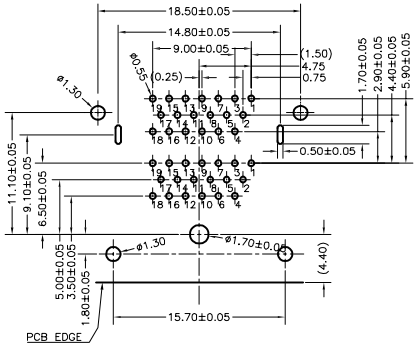

RECOMMENDED PCB LAYOUT
(THICKNESS=1.6±0.15mm)

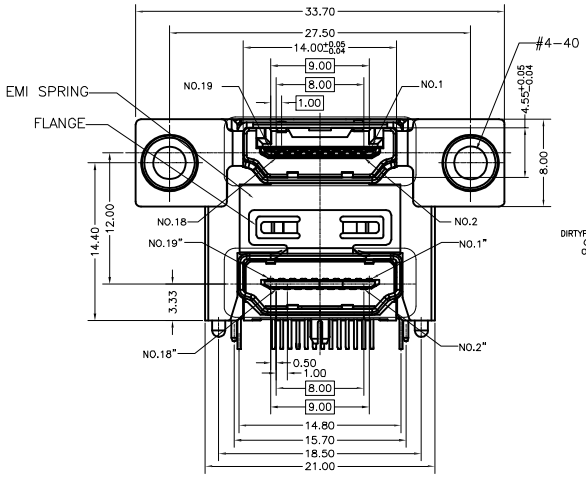

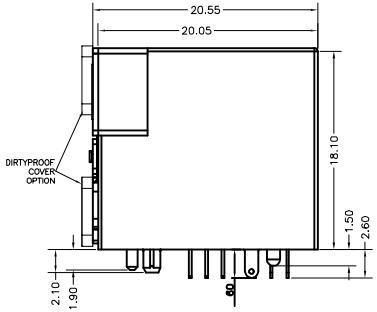

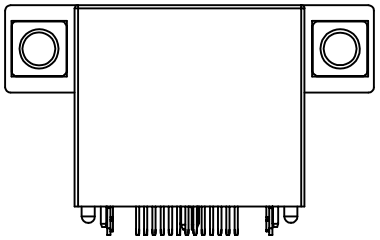

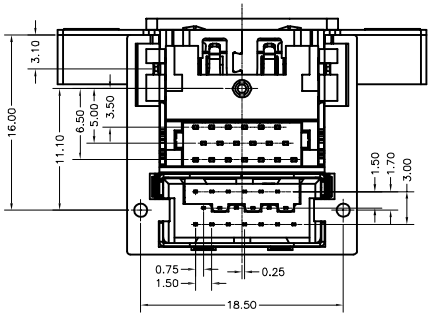

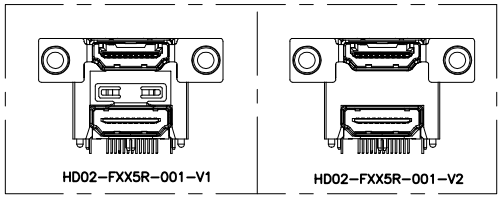

SPECIFICATIONS

SPECIFICATIONS
OPERATING CURRENT: 0.5A MAX.
OPERATION TEMPERATURE: -25°C TO +85°C
DIELECTRIC WITHSTANDING VOLTAGE:
500Volts AC BETWEEN ADIACENT TERMINAL(UNMATE)
300Volts AC BETWEEN ADIACENT TERMINAL(MATE)
INSULATION RESISTANCE:
100Mohm MIN.(UNMATED);10Mohm MIN.(MATED)

TABLE A:

HDMI CONTACT	COPPER ALLOY	SELECTIVER Au OVER Ni
DISPLAYPORT CONTACT	COPPER ALLOY	SELECTIVER Au OVER Ni
BACK SHELL	STEEL	Cu UNDER PLATING Ni OVER
HDMI SHELL	COPPER ALLOY	Cu UNDER PLATING Ni OVER
DISPLAYPORT SHELL	COPPER ALLOY	Cu UNDER PLATING Ni OVER
SPACER	THERMOPLASTIC	UL94V-0
HOUSING	THERMOPLASTIC	UL94V-0
PART NAME	MATERIALS	NOTES

PART NO. INFORMATION

DHD02 - F X X 5 R - 001 - VX

GENDER
F: FEMALE
M: MALE

CONTACT PLATED
1: GOLD FLASH
2: GOLD 3U"
3: GOLD 5U"
4: GOLD 10U"
5: GOLD 15U"
6: GOLD 30U"

HOUSING MATERIAL
A: LCP B: PBT
C: PA9T D: PA6T
E: PA46 F: PA66

HOUSING COLOR
2: WHITE
5: BLACK
9: NATURE

PACKAGE
R: TAPE REEL

Bestcreate Technology Limited

TOLERANCES UNLESS OTHERWISE SPECIFIED:					
X.	±	0.50	X°	±	3°
.X	±	0.25	.X°	±	2°
.XX	±	0.15	.XX°	±	1°

Website:www.bsc-elec.com
Email:bestcreate@bsc-elec.com

DESIGN:	DATE:
I.L	2017.3.1
CHECKED:	DATE:
C.W	2017.3.1
APPROVED:	DATE:
C.W	2017.3.1

TITLE: DUAL HDMI STACKED CONNECTOR THROUGH HOLE TYPE WITH SCREW

MATERILA:	PART NO: HD02-FXX5R-001-VX	SIZE: A4
FINSH:	DWG NO: HD02-FXX5R-001-VX	

REV:	UNIT	SCALE	QUALITY SYMBOLS
A	mm	1=1	