RoHS Compliant

REVISIONS			
REV.	DESCRIPTION	DATE	DESIGN

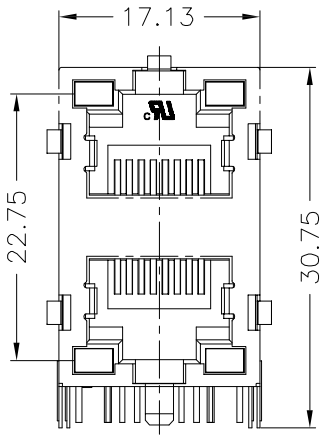

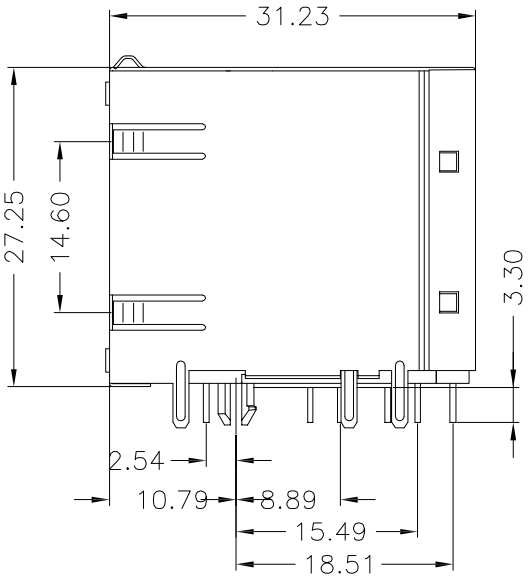

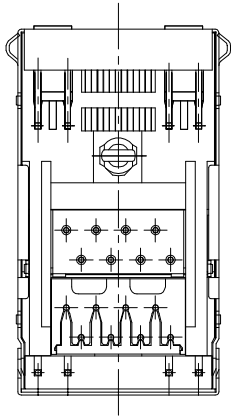

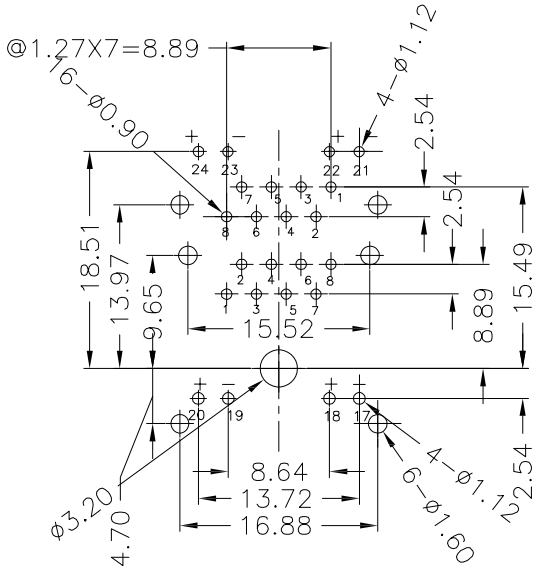

NOTES

MATERIAL
1. HOUSING MATERIAL : PA46 BLACK UL94V-0.
2. CONTACT MATERIAL : PHOSPHOR BRONZE Ø0.46mm.
3. PLATING : GOLD FLASH PLATING OVER NICKEL.
4. SHIELD : BRASS T=0.20mm WITH NICKEL PLATED.

ELECTRICAL
1. VOLTAGE RATING : 125 VAC RMS.
2. CURRENT RATING : 1.5 AMP.
3. CONTACT RESISTANCE : 40 MILLIOHMS MAX.
4. INSULATION RESISTANCE : 500 MEGOHMS MIN @ 100V DC .
5. DIELECTRIC DIELECTRIC RESISTANCE : 500V DC RMS 50Hz. 1MIN.

MECHANICAL
1. DURRABILITY : 750 CYCLES MIN.
2. MATING/UNMATING FORC: 2.24 KG.F MAX.

ENVIRONMENTAL:
1. OPERATION : -40℃～+85℃.
2. STORAGE : -40℃～+85℃.

PART NO. INFORMATION

RJ01- X X D X - 091

CONTACT PLATED
1: G/F 2: AU 3U"
3: AU 5U" 4: AU 10U"
5: AU 15U" 6: AU 30U"

LED COLOR:
1:L-YELLOW R-GREEN
2:L-GREEN R-YELLOW

HOUSING:
A:LCP BLACK B:PA9T BLACK
C:PBT BLACK D:PA46 BLACK

PACKAGE
R: TAPE REEL
T: TRAY

Bestcreate Technology Limited

TOLERANCES UNLESS OTHERWISE SPECIFIED:					
.X	±	0.35	X°	±	3°
.XX	±	0.25	.X°	±	2°
.XXX	±	0.15	.XX°	±	1°

Website:www.bsc-elec.com
Email:bestcreate@bsc-elec.com

DESIGN:	DATE:
I. L	2017. 3. 1
CHECKED: C. W	DATE:
APPROVED: C. W	DATE: 2017. 3. 1

TITLE: VERTICAL RJ45 FEMALE CONNECTOR 12.7H WITH LED LIGHT

MATERILA:	PART NO: RJ01-XXDX-091	SIZE: A4
FINSH:	DWG NO: RJ01-XXDX-091	

REV:	UNIT	SCALE	QUALITY SYMBOLS
A	mm	1=1	