RoHS Compliant

REVISIONS			
REV.	DESCRIPTION	DATE	DESIGN

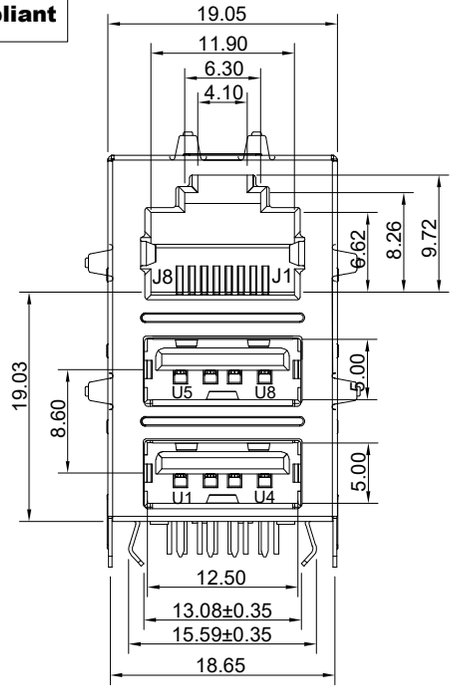

(FRONT VIEW)

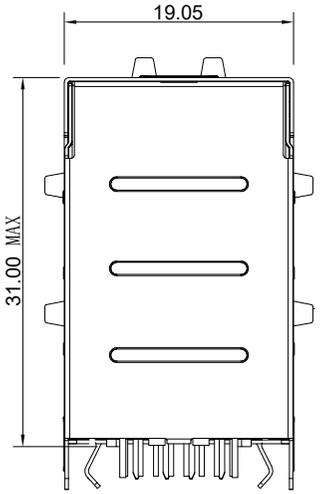

(REAR VIEW)

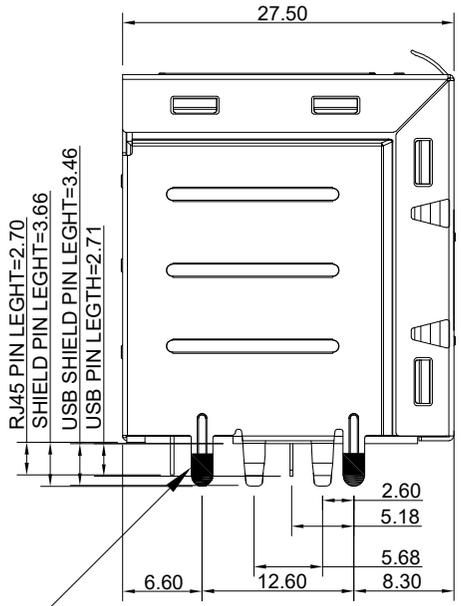

(SIDE VIEW)

外壳脚预沾锡

NOTE:

1.MATERIAL:
Housing: High temp. Thermo plastics,UL94V-0.
Contact:Copper Alloy.
Shell: Steel

2.Electrical performance:
Voltage Current Rating:1.5 AMP. 30V AC
Insulation Resistance:1000MΩ Min.
Contact Resistance:40 mΩ Max.
Dielectric Withstanding Voltage:500V AC

3.Temperature Range:-40℃ to +85℃

4.FINISH:
Contact:Tin Plating 100u" on solder tail area,
RJ45 Gold plating Flash on contact area.
USB Gold plating Flash on contact area,
30u" min Ni underplating over all.

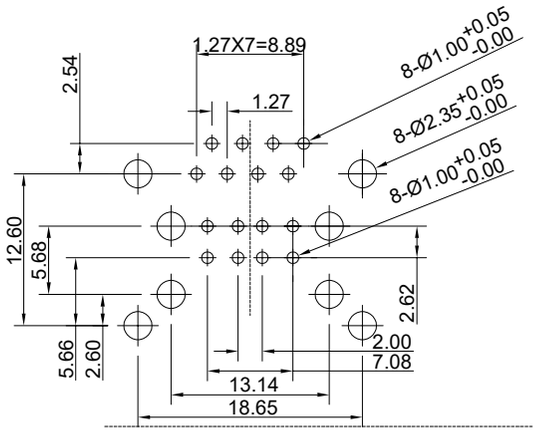

RECOMMENDED P.C.B. PATTERN LAYOUT
(TOP VIEW) (ALL TOLERANCE ARE:0.05mm)

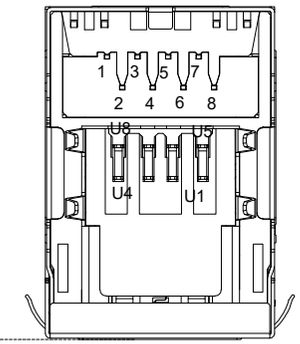

(BOTTOM VIEW)

PART NO. INFORMATION

RJ2U2001- X 5 0 X - 003

CONTACT PLATED
1: G/F 2: AU 3U''
3: AU 6U'' 4: AU 15U''
5: AU 30U''

PACKAGE
R: TAPE REEL
T: TRAY

Bestcreate Technology Limited

TOLERANCES UNLESS OTHERWISE SPECIFIED:					
.X	±	0.35	X.°	±	3°
.XX	±	0.25	.X°	±	2°
.XXX	±	0.15	.XX°	±	1°

Website:www.bsc-elec.com
Email:bestcreate@bsc-elec.com

DESIGN: I. L	DATE: 2017. 3. 1	TITLE: RJ45+DUAL ROW USB2.0 SUS SHELL	
CHECKED: C. W	DATE: 2017. 3. 1	MATERILA:	PART NO: RJ2U2001-X50X-003 / SIZE: A4
APPROVED: C. W	DATE: 2017. 3. 1	FINSH:	DWG NO: RJ2U2001-X50X-003

REV:	UNIT	SCALE	QUALITY SYMBOLS
A	mm	1=1	