RoHS Compliant

REVISIONS			
REV.	DESCRIPTION	DATE	DESIGN

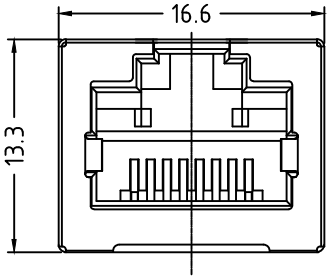

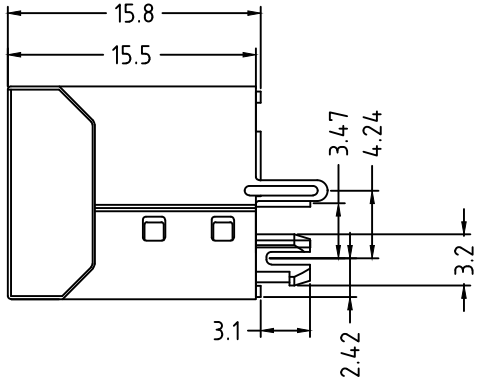

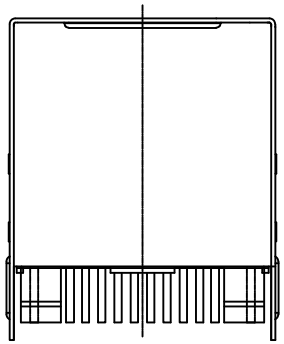

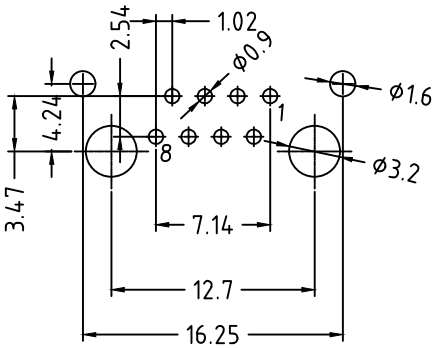

SUGGESTED PCB LAYOUT
(TOP VIEW)

NOTES

MATERIAL
1. HOUSING MATERIAL : PBT/PA46 UL94V-0.
2. CONTACT MATERIAL : PHOSPHOR BRONZE ϕ0.46mm.
3. PLATING : GOLD PLATING fu"~50u"OVER NICKEL.
4. SHIELD : 0.20mm THICKNESS COPPER ALLOY WITH NICKEL PLATED.

ELECTRICAL
1. VOLTAGE RATING : 125 VAC RMS.
2. CURRENT RATING : 1.5 AMP.
3. CONTACT RESISTANCE : 30 MILLIOHMS MAX.
4. INSULATION RESISTANCE : 500 MEGOHMS MIN @ 500V DC .
5. DIELECTRIC RESISTANCE : 1000V AC RMS 50Hz. 1MIN.

MECHANICAL
1. DURRABILITY : 750 CYCLES MIN.
2. PCB RETENTIONPRE-SOLDER : 1 LB MIN.

ENVIRONMENTAL:
1. STORAGE : -40℃～+85℃.
2. OPERATION : 0° C TO 70° C.

PART NO. INFORMATION

RJ01- X 5 1 X - 059

CONTACT PLATED
1: G/F 2: AU 3U"
3: AU 6U"

PACKAGE
R: TAPE REEL
T: TRAY

HOUSING:
1:LCP BLACK
2.PBT BLACK
3.PA46 BLACK
4.PA9T BLACK

Bestcreate Technology Limited

TOLERANCES UNLESS OTHERWISE SPECIFIED:

.X	±	0.35	X.°	±	3°
.XX	±	0.25	.X°	±	2°
.XXX	±	0.15	.XX°	±	1°

Website:www.bsc-elec.com
Email:bestcreate@bsc-elec.com

DESIGN:	DATE:
I.L	2017.3.1
CHECKED:	DATE:
C.W	2017.3.1
APPROVED:	DATE:
C.W	2017.3.1

TITLE: VERTICAL RJ45 8P8C FEMALE CONNECTOR DIP TYPE

MATERILA:	PART NO: RJ01-X5XX-059	SIZE: A4
FINSH:	DWG NO: RJ01-X5XX-059	

REV:	UNIT	SCALE	QUALITY SYMBOLS
A	mm	1=1	