由 Autodesk 教育版产品制作

RoHS Compliant

REVISIONS			
REV.	DESCRIPTION	DATE	DESIGN

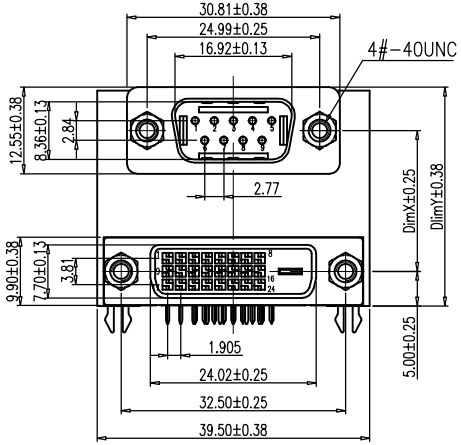

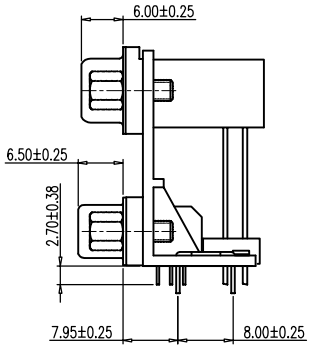

NOTE:
1.MATERIALS AND FINISHED
INSULATOR :PBT+30% GF UL 94V-0,
SHELL : STEEL, NI FINISHED
CONTACT MATERIAL : BRASS, SELEVITE GOLD FINISHED
BRACKET: ZINC ALLOY ,NI FINISHED,WITH #4-40 THREADED ASSEMBLED
HARPOON: BRASS,SN FINISHED
2.ELECTRICAL CHARACTERISTICS
CURRENT RATING : 3.0 AMP DC
VOLTAGE RATING: 250 V DC
CONTACT RESISTANCE :30 MILLIOHMS MAX.
DIELECTRIC WITHSTANDING VOLTAGE : 1000 V AC MIN.
INSULATION RESISTANCE : 1000 MEGAOHMS MIN.
3.ENVIRONMENTAL
OPERATING TEMPERATURE: -55°C ~ +85°C
STORAGE TEMPERATURE:-55°C ~ +105°C
4.HOW TO ORDER:

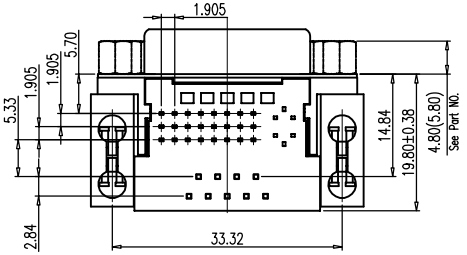

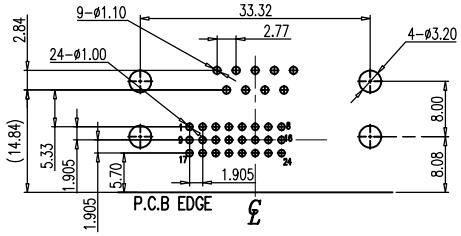

RECOMMENDED P.C.B LAYOUT

DL307X-33XX5H4-XX220

- Male+Female
- DR+DVI
- 2: DimX/Y=20.4/31.68
- 1: DimX/Y=15.88/27.16
- 33: DR9+DVI24
- 38: DR9+DVI29
- S:Selevite Gold Bright TIN
- M:Selevite Gold Matte TIN
- 1:G/F 5: 5u"
- 2:2u" 6: 10u"
- 3:3u" 7: 15u" 9: 1u"
- 5. Full Ni(Shell)
- 0: RoHs
- 2: Quad Arrowhead Boardlock (7.95x8.0)
- K: 5.8*12.8 Hexagonal Screw(iron)
- J: 5.8*12.8 Hexagonal Screw(copper)
- 6: 4.8*11.8 Hexagonal Screw(iron)
- 5: 4.8*11.8 Hexagonal Screw(copper)
- 0: W/O Screw
- C: Attach screw type
- B: Ass'y screw type
- A: No screw type
- 4: (HSG)PBT+(LJZ)PA6T
- K: Upper-Green, Lower-White
- H: Upper-Black, Lower-White
- B: Upper-Blue, Lower-White
- 1: All Black

Bestcreate Technology Limited

TOLERANCES UNLESS OTHERWISE SPECIFIED:

.X	±	0.35	X°	±	3°
.XX	±	0.25	.X°	±	2°
.XXX	±	0.15	.XX°	±	1°

Website:www.bsc-elec.com
Email:bestcreate@bsc-elec.com

REV:	UNIT	SCALE	QUALITY SYMBOLS
A	mm	1=1	

DESIGN: I.L DATE: 2017.3.1
CHECKED: C.W DATE:
APPROVED: C.W DATE: 2017.3.1

TITLE: DR9 MALE+DVI(24+0) CONNECTOR 90D FOR PCB

MATERILA:	PART NO: DL307X-33XX5H4-XX220	SIZE: A4
FINSH:	DWG NO: DL307X-33XX5H4-XX220	

由 Autodesk 教育版产品制作